grindaix
A QUAKER HOUGHTON COMPANY

LUBRICOOLANT SUPPLY SYSTEM FOR **CAMSHAFT GRINDING**

Due to changing contact situations during camshaft grinding, the position of the grinding points shifts. Lubricoolant must therefore be directed in a targeted and effective way. We supply lubricoolant to your grinding process via an adapted needle nozzle (top nozzle). The nozzle components have wear protection, resulting in a longer operating life. Beneath the machining zone, the spark jet is eliminated by means of an efficient Grindaix extinguishing nozzle. Here, too, special wear protection measures ensure that the extinguishing nozzle retains its lubricoolant exit geometry for a long time. This guarantees consistent machining conditions and avoids an increase in the lubricoolant flow rate over the lifetime of the nozzle.

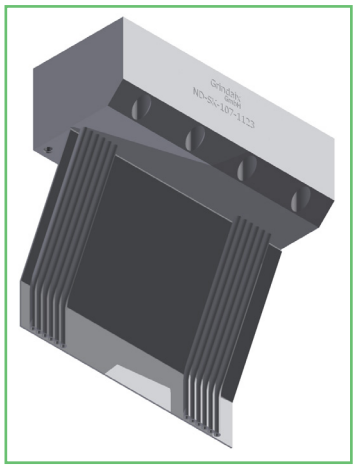

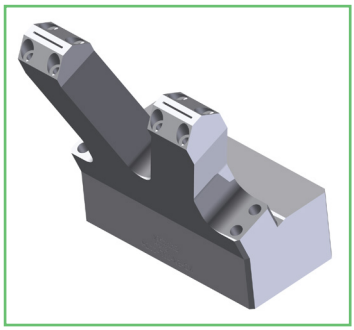

Enhance your Productivity
Reduce your CO_2 Emissions

EXAMPLE CALCULATION

At a pressure of 10 bar, a top nozzle consumes 56 l/min of lubricoolant. The lubricoolant exit speed lies at 25 m/s. The extinguishing nozzle is operated at a pressure of 3 bar and consumes 10 l/min of lubricoolant at an exit speed of 10 m/s.

The stated values may differ depending on factors such as the machine tool, production unit, production process, nozzle type or lubricoolant. If you would like to have your individual values and savings potential calculated, simply contact us.

Nozzle	Pressure	Flow Rate	Coolant Exit Speed
Top Nozzle	10 bar	56 l/min	25 m/s
Extinguishing Nozzle	3 bar	10 l/min	10 m/s

EXAMPLE NOZZLE CHARACTERISTIC LINE

The nozzle diagram provides you with initial assistance in achieving suitable supply of the nozzle with respect to pressure and flow rate.

The total pressure (static and dynamic) is represented which would be measured directly in front of the nozzle. This pressure does not correspond to your pump pressure or the delivery height of the pump.

Pressure losses in the supply line between the pump and nozzle as well as the effects of any other lubricoolant discharge along the same supply line are not taken into consideration. These factors may be recorded and evaluated in our Coolant Audit. Only then can your system be optimized with respect to consumption.

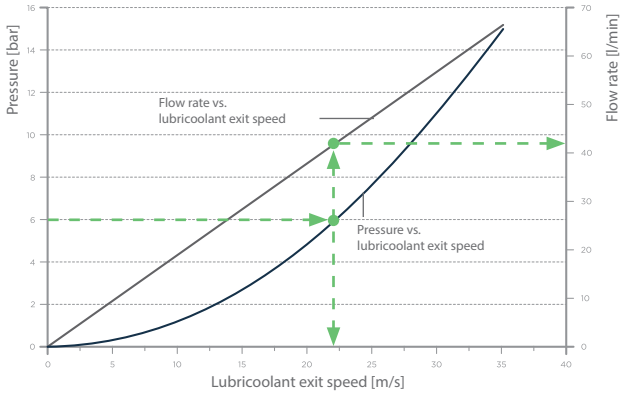

Starting from the pressure, you can directly find the associated lubricoolant exit speed. The grey line shows the correlation between the lubricoolant exit speed and associated lubricoolant flow rate.

AS MUCH AS NECESSARY, AS LITTLE AS POSSIBLE!

Our Grindaix nozzles introduce only as much lubricoolant as necessary to your machine sites. More precise lubricoolant supply increases your tool life and enhances the cooling effect in the grinding zone. Cycle times become shorter, so there is no chance of grinding burn. This has a direct effect on productivity.

ECONOMIC OPTIMIZATION OF YOUR PROCESSES

By reducing the entire lubricoolant consumption of your machine, you not only make cost savings but also free up reserves for your lubricoolant filtration, leading to an increase in filtration quality.

The scaling down or multiple use of peripheral units, such as pumps and coolers, allows you to considerably reduce other resources (oil, water, energy) as well as the CO_2 emissions from your production. The CO_2 emissions are calculated as an equivalent directly from your energy and resource consumption. Thus you also protect the environment.

ORDER INFORMATION

Camshaft ND (Needle Nozzle)	
Top Nozzle	available for all camshaft geometries and grinding wheel widths incl. characteristic line
Extinguishing Nozzle	available for all camshaft geometries and grinding wheel widths incl. characteristic line

Auxiliary Equipment	
Pressure Sensor	digital / analog pressure display unit
Pressure sensor tube	needle profile stabilizer
Pressure sensor connector	wear protection sheet
Compressed air connector (cleaning)	

Grindaix GmbH
Marie-Curie-Str. 8
50170 Kerpen

☎ +49 2273• 953 730

info@grindaix.de
www.grindaix.de

grindaix
A QUAKER HOUGHTON COMPANY