grindaix
A QUAKER HOUGHTON COMPANY

LUBRICOOLANT SUPPLY SYSTEMS
ND-CENTERLESS

PLUG & PLAY – LUBRICOOLANT NOZZLE RETROFIT SET FOR CENTERLESS GRINDING

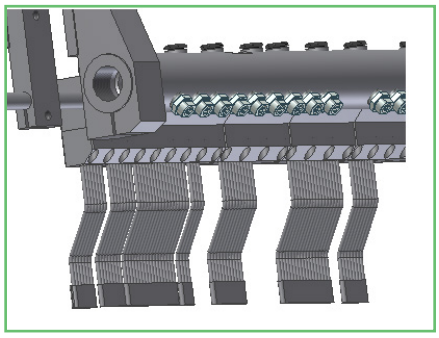

ND-Centerless – the nozzle combination for lubricoolant supply to the grinding site and cleaning of the grinding wheels in an all-in-one nozzle system. Due to the exposed location of its high-pressure cleaning nozzle, situated directly above the grinding site, the new type of Grindaix nozzle enables grinding wheels to be cleaned efficiently and highly effectively, even in the case of conventional grinding wheels with a significant diameter reduction. Less costly centrifugal pumps are used instead of screw pumps, which require protection and are often expensive. With the fully integrated pressure sensor system, it is possible to use the Coolant Display to monitor the risk of grinding burn and to check that the wheel has been cleaned properly via the Coolant Display.

All-in-one nozzle system – Cooling the process and cleaning the wheel

Properties of the combination nozzle

- Combination of lubricoolant supply to the grinding site and wheel cleaning nozzle
- Absolutely leakproof up to 50 bar
- Precise positioning (+/- 500 µm)
- For plunge or throughfeed centerless grinding
- Incl. Coolant Display
- Housing to protect from grinding sludge deposits
- Resistant to lubricoolants, oils, greases, hot chips
- Quick and easy to mount

EXAMPLE CALCULATION/LUBRICOOLANT REQUIREMENT VALUES

Pressure	Nozzle Width	Flow rate	Exit Speed
4 bar	125 mm	94 l/min	13.5 m/s
20 bar	125 mm	145 l/min	40 m/s

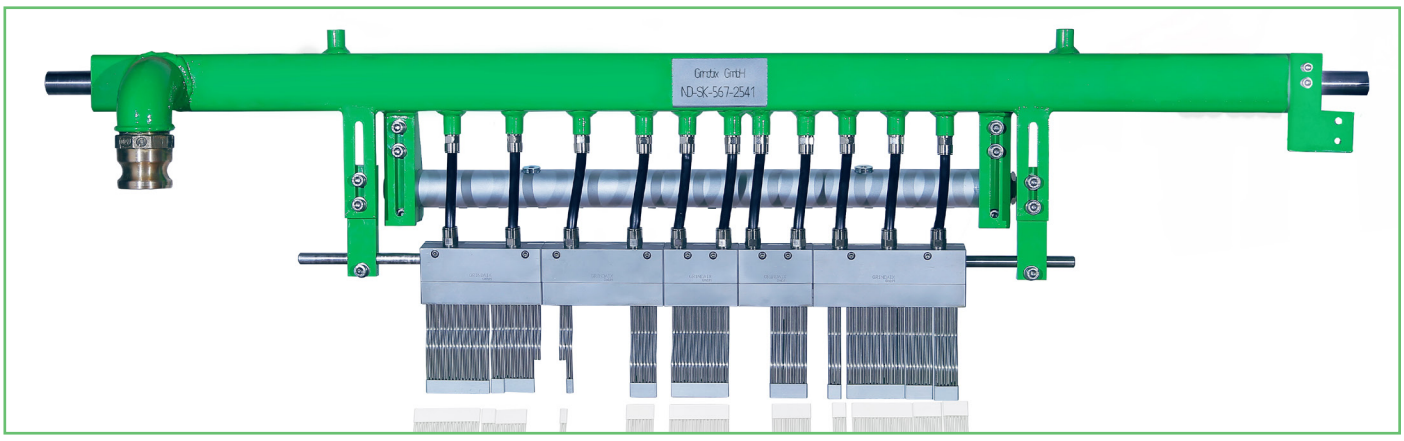

The system can be designed and adapted in a customized way for all applications. The table above shows example consumption values of a grindaix ND-Centerless for use on a centerless machine with an active grinding wheel width of 125 mm in total during centerless plunge grinding.

All our customers receive the precise consumption values via a customer-specific nozzle characteristic curve sheet, which states the pressure, volume flow and lubricoolant exit speed.

The ND Centerless can be delivered with all measuring and set-up technology included; if required, we can also supply a compressed air connection for nozzle cleaning, a wear protection sheet and needle stabilizers as collision protection.

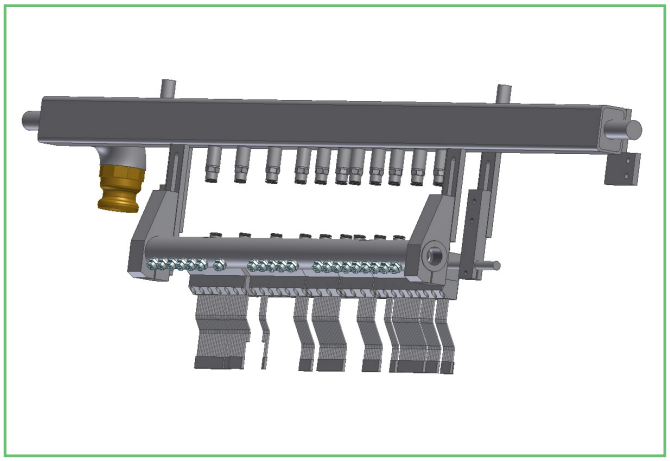

AS MUCH AS NECESSARY, AS LITTLE AS POSSIBLE!

Our Grindaix nozzles introduce only as much lubricoolant as necessary to your machine sites. They supply the contact area in a targeted way with a high lubricoolant exit speed, thereby considerably reducing the lubricoolant flow rate compared to conventional solutions. More precise lubricoolant supply increases your tool life and enhances the cooling effect in the grinding zone. Cycle times become shorter, so there is no chance of grinding burn. This has a direct effect on productivity.

ECONOMIC OPTIMIZATION OF YOUR PROCESSES

By reducing the entire lubricoolant consumption of your machine, you not only make cost savings but also free up reserves for your lubricoolant filtration, leading to an increase in filtration quality.

The scaling down or multiple use of peripheral units, such as pumps and coolers, allows you to considerably reduce other resources (oil, water, energy) as well as the CO_2 emissions from your production. The CO_2 emissions are calculated as an equivalent directly from your energy and resource consumption. Thus you also protect the environment.

ORDER INFORMATION

Lubricoolant Nozzle Retrofit Set For Centerless Grinding

Name	Description
ND-Centerless	available in all widths and geometries

Auxiliary Equipment

Name	Description
Pressure Sensor	analog/digital
Pressure Sensor Connector	standard ¼“
Wear Protection	available in all widths and geometries
Profile Geometry Stabilizer	available in all widths and geometries

Grindaix GmbH
Marie-Curie-Str. 8
50170 Kerpen

☎ +49 2273• 953 730

info@grindaix.de
www.grindaix.de

grindaix
A QUAKER HOUGHTON COMPANY