grindaix
A QUAKER HOUGHTON COMPANY

Coolant Supply Systems for **CRANKSHAFTS**

The Grindaix nozzle for crankshaft grinding provides optimum lubricoolant supply to cylindrical and web surfaces, taking into account tool wear. This allows collision-free operation without adjustment. With conventional nozzles, wear causes the grinding tools to change their geometry, leading to collisions between the nozzles and the webs of the crankshafts. For this reason, such nozzles are mounted outside of the geometry envelope, rendering them inefficient. Grindaix nozzles avoid this negative effect by a specially adapted reduction in the outer contour of the nozzle. Grindaix nozzles are positioned collision-free between the webs within the component contour. The lubricoolant jet is thus directed very efficiently into the grinding gap. This reduces the risk of grinding burn and leads to briefer cycle times.

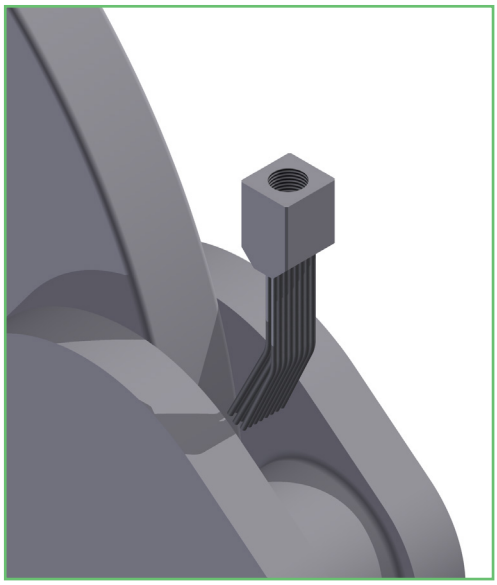

Enhance your Productivity
Reduce your CO_2 Emissions

EXAMPLE CALCULATION ND-SK-1869

Pressure	Flow Rate	Exit Speed
12 bar	102 l/min	30 m/s

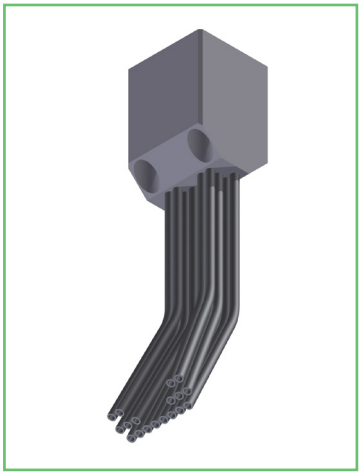

At a pressure of 12 bar, the nozzle consumes 102 l/min of lubricoolant. The lubricoolant exit speed lies at 30 m/s. The stated values may differ depending on factors such as the machine tool, production unit, production process, type of nozzle or lubricoolant. If you would like to have your individual values and savings potential calculated, simply contact us. The stated values may differ depending on factors such as the machine tool, production unit, production process, type of nozzle or lubricoolant. If you would like to have your individual values and savings potential calculated, simply contact us.

AS MUCH AS NECESSARY, AS LITTLE AS POSSIBLE!

Our Grindaix nozzles introduce only as much lubricoolant as necessary to your machining sites. More precise lubricoolant supply increases your tool life and enhances the cooling effect in the grinding zone. Cycle times become shorter, so there is no chance of grinding burn. This has a direct effect on productivity.

ECONOMIC OPTIMIZATION OF YOUR PROCESSES

By reducing the entire lubricoolant consumption of your machine, you not only make cost savings but also free up reserves for your lubricoolant filtration, leading to an increase in filtration quality.

The scaling down or multiple use of peripheral units, such as pumps and coolers, allows you to considerably reduce other resources (oil, water, energy) as well as the CO_2 emissions from your production. The CO_2 emissions are calculated as an equivalent directly from your energy and resource consumption. Thus you also protect the environment.

EXAMPLE NOZZLE CHARACTERISTIC LINE

The nozzle diagram is intended to provide you with initial assistance in achieving suitable supply of the nozzle with respect to pressure and flow rate. The total pressure (static and dynamic) is represented which would be measured directly in front of the nozzle. This pressure does not correspond to your pump pressure or the delivery height of the pump. Pressure losses in the supply line between the pump and nozzle as well as the effects of any other lubricoolant discharge along the same supply line are not taken into consideration.

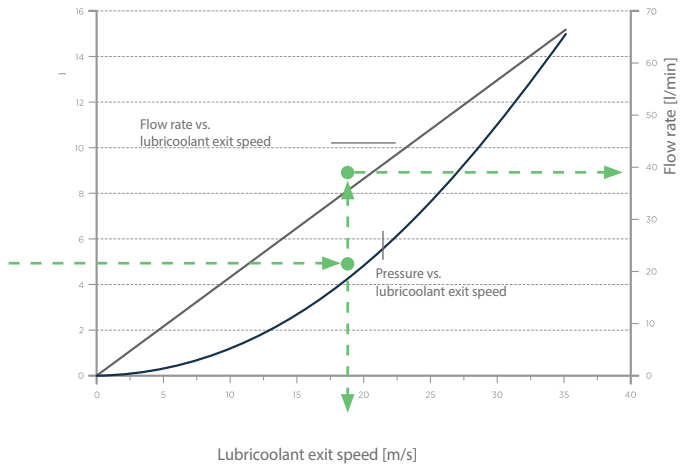

Starting from the pressure, you can directly find the associated lubricoolant exit speed. The grey line shows the correlation between the lubricoolant exit speed and associated lubricoolant flow rate.

ORDER INFORMATION

Grindaix nozzle for crankshaft grinding	
Item No.	Description
CS / ND-SK-	The nozzles are individually designed for a particular crankshaft geometry and/or size set. All nozzles are available with a characteristic line.

Auxiliary Equipment	
Name	Description
Pressure Sensor	analog/digital
Pressure Sensor Connector	standard 1/4“
Compressed Air Connector	nozzle cleaning ø 1/4“
Quick-Change System	quick-release/interchangeable head
Wear Protection	available in all widths and geometries
Profile geometry stabilizer	available in all widths and geometries

Grindaix GmbH
Marie-Curie-Str. 8
50170 Kerpen

☎ +49 2273 • 953 730

info@grindaix.de
www.grindaix.de

grindaix
A QUAKER HOUGHTON COMPANY