A QUAKER HOUGHTON COMPANY

Coolant Supply Systems for
GRINDING OF TURBINE COMPONENTS

There are many different coolant supply areas in the multi-cycle machining of turbine blades. In order to avoid having to supply cooling lubricant to all areas of a grinding wheel set while only a small section is in contact, we have developed the Grindaix nozzle, which supplies the areas that are in contact with the grinding wheel with coolant via suitable valve technology. This is regulated via the machine control system.

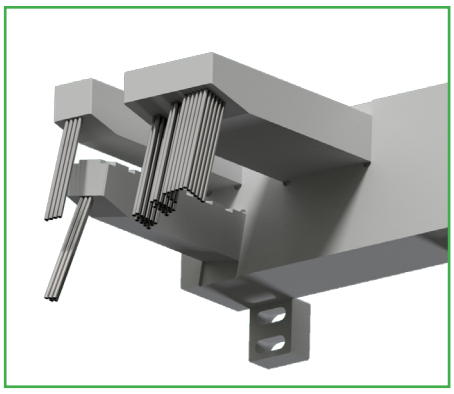

Variante 1: Needle nozzle

Product advantages

- valve controlled
- reduction of cooling lubricant requirements
- optimum supply of individual pane areas (selectable)
- reduction of the risk of grinding burn
- longer wheel life

Improve your productivity
Reduce your CO_2 emissions

FUNCTION

The benefit is obvious. You reduce the amount of coolant required by up to 60% and at the same time can cool the grinding gap more specifically and efficiently. With the laser-supported positioning aid, the Coolant Pointer, you can position the nozzle precisely. The Coolant Display acts as a "grinding burn detector", showing you exactly which pressure, volume flow and coolant outlet speed you are currently using and whether this corresponds to the required quantity. From this you can directly deduce a possible undersupply.

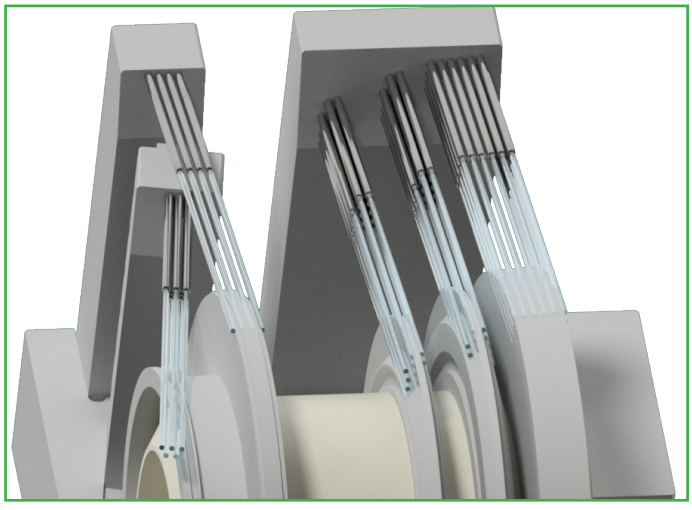

Grindaix-Nozzel

THE NOZZLE CHARACTERISTIC CURVE

The nozzle diagram is intended to provide you with a first aid for the realisation of a suitable supply of the nozzle with regard to pressure and volume flow.

It shows the total pressure (static and dynamic) that would be measured directly in front of the nozzle. This pressure does not correspond to your pump pressure or the delivery head of the pump.

Pressure losses in the supply line between pump and nozzle as well as influences of possible other cooling lubricant outlets on the same supply line are not considered. Only in this way can your system be designed to optimise consumption.

Starting from the print, you will find the corresponding coolant outlet speed directly. Using the grey straight line you will then find the correlation between the cooling lubricant outlet speed and the associated cooling lubricant volume flow.

EXAMPLE NOZZLE CHARACTERISTIC CURVE

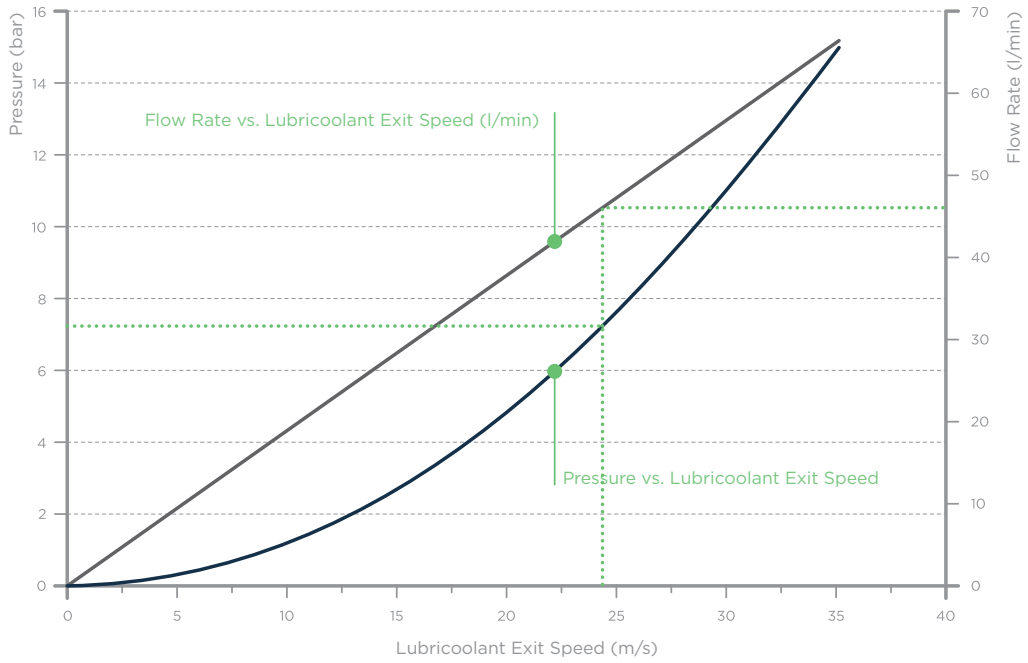

ORDER INFORMATION

Grindaix Nozzle	
Name	Description
ND-SK-	The nozzles are individually designed for the geometric parameters of the grinding application. All nozzles incl. characteristic curves.

Auxiliary Equipment	
Name	Description
Pressure Sensor	analog/digital
Pressure Sensor Connector	standard 1/4“
Compressed Air Connector	nozzle cleaning ø 1/4“
Wear Protection	available in all widths and geometries
Profile geometry stabilizer	available in all widths and geometries
Coolant Pointer	laser adjustment aid - nozzle positioning
Coolant Display	device for grinding burn monitoring

Grindaix GmbH
Marie-Curie-Str. 8
50170 Kerpen

☎ +49 2273• 953 730

info@grindaix.de
www.grindaix.de

grindaix
A QUAKER HOUGHTON COMPANY