

PRODUCT CATALOGUE

Coolant Supply Systems

for Machine Tools

Efficient coolant systems.

grindaix
A QUAKER HOUGHTON COMPANY

Nozzles - Overview of Services

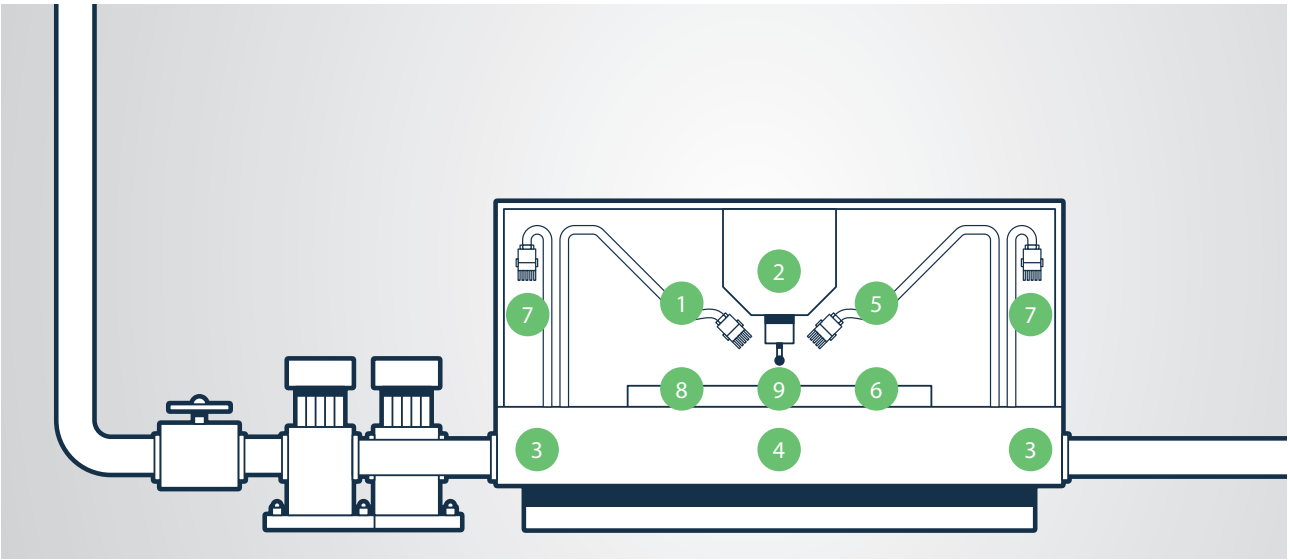

grindaix nozzles for your machine tools:

1. Cooling of the machining task/tool/component
2. Cooling of dressing tools
3. Bed/corner flushers
4. Bed flusher/collecting channel
5. High-pressure cleaning nozzles - tool
6. Cleaning nozzles - component
7. Cleaning nozzles - machine cover
8. Cooling nozzle probe, bezels, workpiece spindle head, tailstock
9. Clearing nozzles (chip/spark jet)

Auxiliary Equipment

- Wear protection sheet
- Protection/stabilizer nozzle end
- Clampings
- Manual radial adjustment
- Manual axial adjustment
- Pressure sensor (analog/digital)

grindaix needle nozzles provide your lubricoolant system with exactly what it needs: precision.

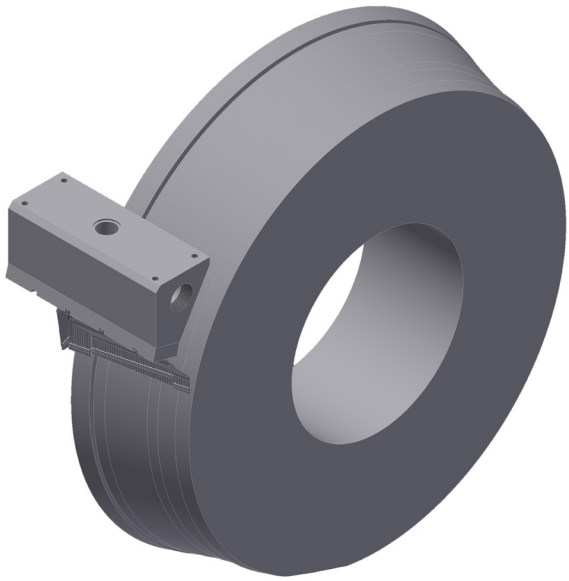

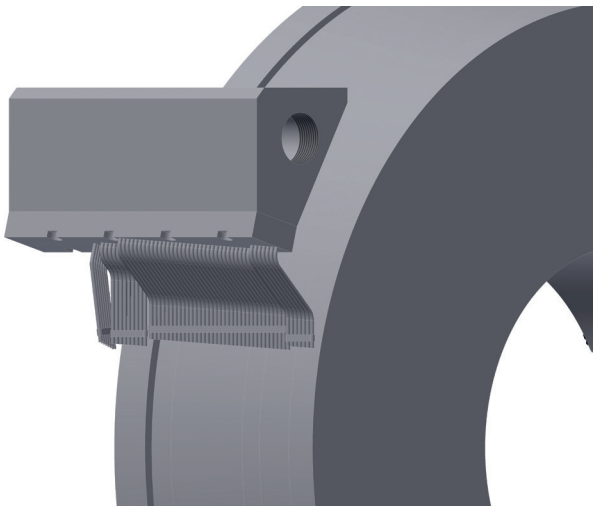

- More precise, easier, better: Nozzles from grindaix are individually designed for each machine and are on offer for all production processes. In this way, the lubricoolant is supplied in a targeted way to the machining site – and metered in an exact, needs-based manner. Narrow nozzles ensure that the lubricoolant exits at a sufficiently high speed while still reaching the machining site with maximum efficiency.
- Up to 16 percent of the production costs are incurred through the use of lubricoolants. With our nozzles, you drastically reduce consumption and minimize waste when handling lubricoolants, while at the same time achieving optimum supply for your production task. By analyzing your machine and processing situation, we determine we determine how much lubricoolant is required where, in which volume, when and at which exit speed. In addition, we check where and how many other resources (oil, water, energy) are being wasted. This directly relates to the CO_2 balance of your productionn unit. Reduce your CO_2 emissions at this stage!



Why Grindaix Nozzles?

Challenges

- Lubricoolants do not reach the machining site in a targeted or reproducible way
- Grinding burn/thermal damage occurs on the ground components
- Your productivity is impaired by improper lubricoolant supply
- Overly high volumes of lubricoolant are used
- Very high operating costs for pumps as well as insufficient lubricoolant periphery
- Poor CO_2 balance of your production unit

Advantages of grindaix nozzles

- High lubricoolant exit speed
- Targeted supply to the machining site
- All profile-adapted nozzle types may be supplied for all production processes
- Optimum lubricoolant use with respect to pressure, flow rate, exit speed
- Reduction in filtration volume
- Reduction in tool wear
- Increase in productivity
- Avoidance of waste
- Improvement of your CO_2 balance

Grindaix Nozzles - Stock Articles

ready for shipment*



NEEDLE NOZZLES
ND-10
ND-20
ND-25
ND-30
ND-40
ND-50
ND-60
ND-80
ND-100

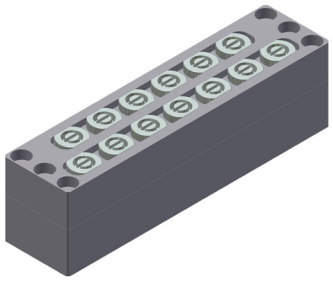

CLEANING NOZZLES
RD-16
RD-24
RD-40
RD-64
RD-80
RD-104



DISTRIBUTION BLOCKS AND CLAMPINGS
VB-400
VB-528
VB-700
Clampings

* incl. nozzle characteristic line (consumption data)

Your Custom-Made Product

How to order nozzles

1 Send us your process and machine information (process data, machining geometry, lubricoolant supply, available space, etc.).

2 Based on your individual requirements, we will generate a design proposal for the nozzles as well as an appropriate offer.

3 You check our design proposal, release it for production and place an order with us for the required nozzle.

4 We produce and assemble all components and send you the ordered nozzles, including the relevant nozzle characteristic line, by the agreed delivery date.

Grindaix – Nozzle Characteristic Lines

How do you read our characteristic line for nozzles?

The nozzle diagram is intended to provide you with initial assistance in achieving a suitable supply to the nozzle with respect to pressure and flow rate.

It shows the total pressure (static and dynamic) which would be measured directly in front of the nozzle. This pressure does not correspond to your pump pressure or the pumping height.

Pressure losses in the supply line between the pump and nozzle as well as the effects of any other lubricoolant discharge along the same supply line are not taken into account. These factors can be recorded and evaluated in one of our COOLANT AUDITS. Only this allows your system to be optimized with respect to consumption.

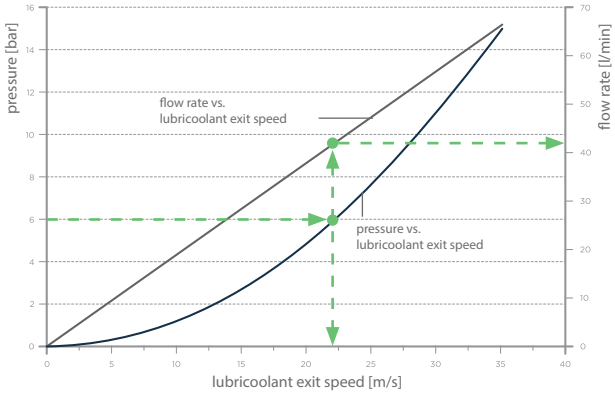

Starting with the pressure, you directly find the associated lubricoolant exit speed. The grey line enables you to then determine the correlation between the lubricoolant exit speed and the associated lubricoolant flow rate.

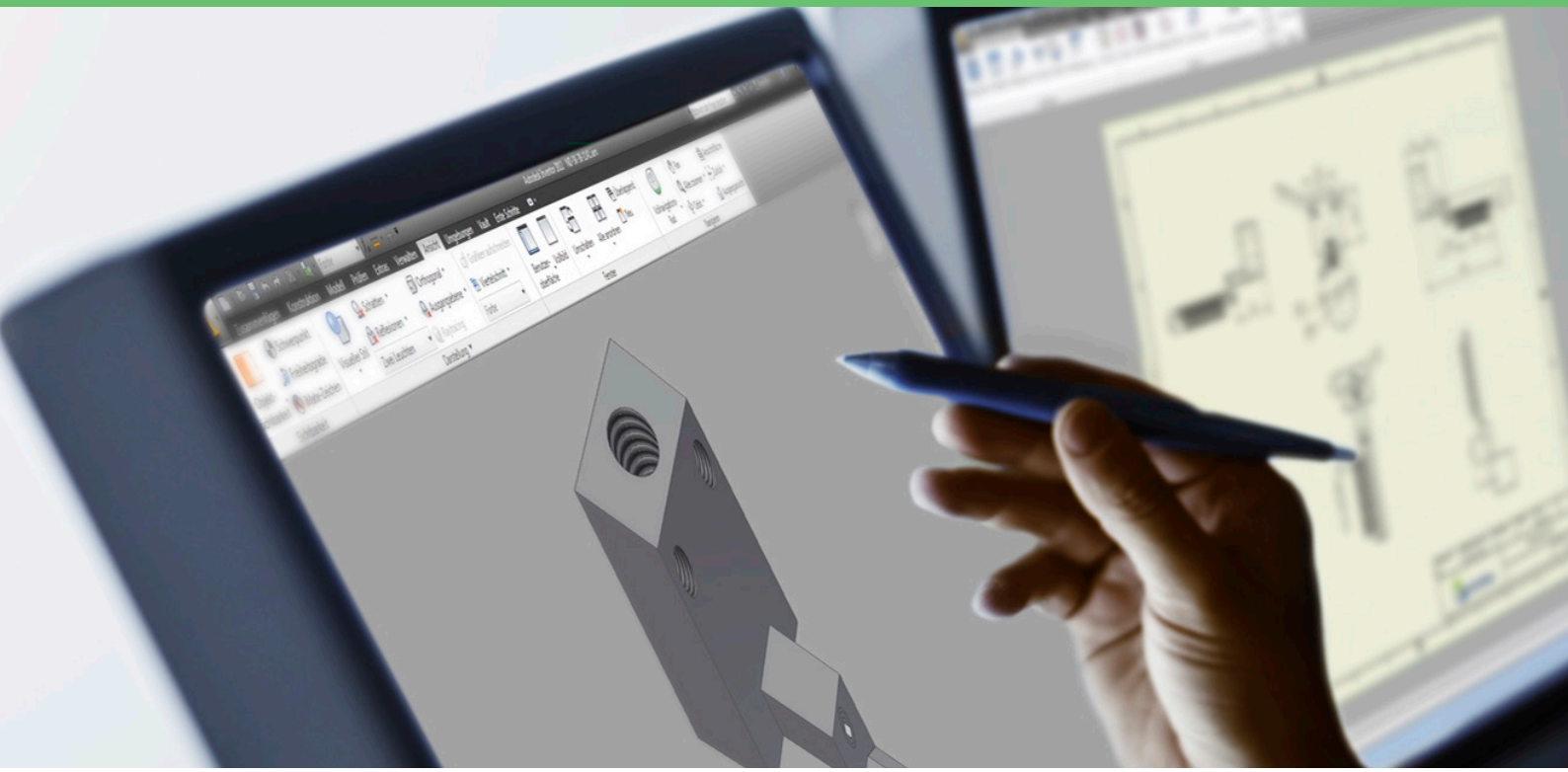

Nozzle Engineering

Your lubricoolant nozzle is as unique as your process!

When analyzing your production unit, we record your existing machining steps and relevant machine, tool and lubricoolant periphery. This results in precise knowledge of whether or not you are undersupplying your process and thus impairing your productivity, and whether or not you are generating significant waste when it comes to lubricoolant use.

For every nozzle type we know when, where, how much and at what exit speed the lubricoolant is flowing.

Every machining task is geometrically unique. We design our nozzles to precisely meet your requirements. Upon request, you can receive nozzles with integrated pressure monitoring and a nozzle-specific characteristic line, providing you with the correlation between pressure/lubricoolant exit speed and lubricoolant flow rate. Only with this precise knowledge can you operate your machine to maximum capacity.

Grindaix Nozzles for ...

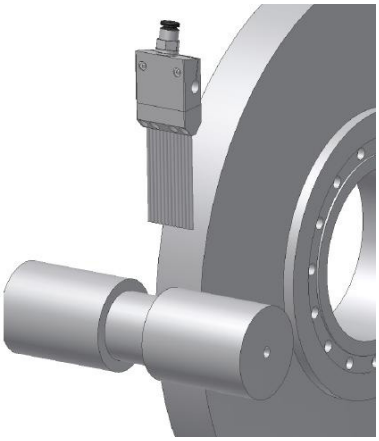

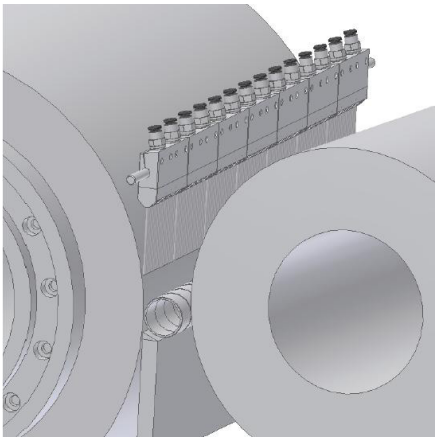

External cylindrical grinding

- During external cylindrical grinding, diverse components are machined with the tool circumference or face as well as using different grinding wheel profiles.
- The needle nozzles may be used in a linear arrangement for cylindrical machining or they may be adapted for face machining and for machining with complex profiles.
- Example applications include: shaft components, chuck parts, transmission shafts, camshafts, crankshafts, injector nozzles, etc.
- Also available with quick changer

Centreless grinding

- During centerless grinding, it is common for very high volumes of lubricoolant to be used. Needle nozzles can reduce these volumes by up to 70 %. This ensures total supply to the grinding gap.
- Several individual nozzles cover the grinding gap length. These are supplied by a distribution block and regulated with variable flow depending on the grinding zone (e.g. roughing zone/spark-out zone).
- grindaix can supply an entire system, consisting of a nozzle block, distribution block and machine clampings.
- The system may be used for all cylindrical and profiled parts in plunge and through-feed grinding operations.

Grindaix Nozzles for ...

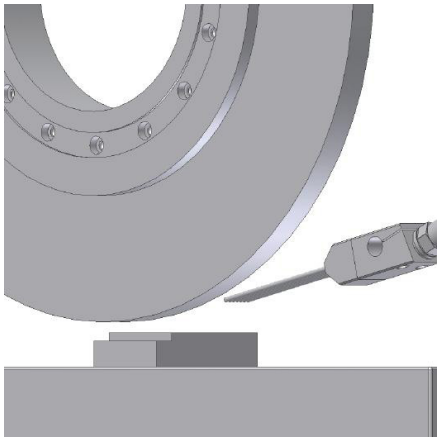

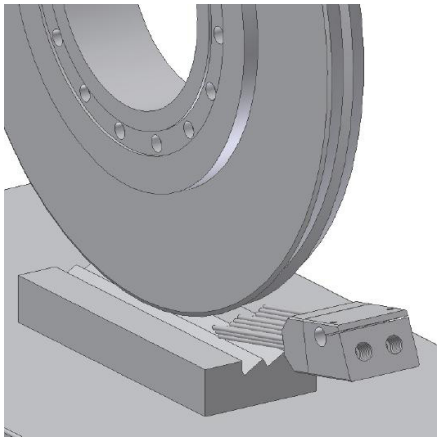

Surface grinding

- In general, high material removal rates and high surface qualities are demanded when surface grinding slots or planar sufaces.
- The use of needle nozzles leads to highly productive machining, avoiding thermal component damage during creep-feed and pendulum grinding.
- Example applications include: turbine blades, functional surfaces, etc.

Surface profile grinding

- During surface profile grinding, large contact areas exist between the grinding wheel and the component.
- Complex profile geometries render targeted lubricoolant supply particularly difficult.
- The use of profiled needle nozzles generates a profile-adapted lubricoolant jet which is supplied precisely to the contact zone.
- Example applications include: guideways, slide rails, etc.

Grindaix Nozzles for ...

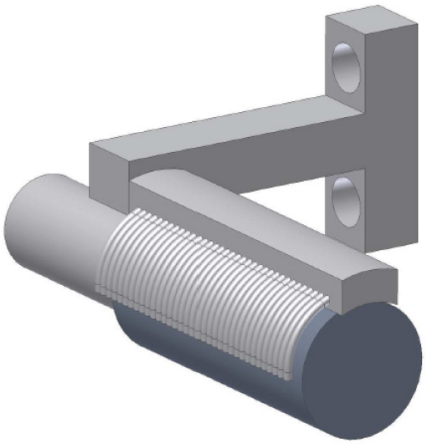

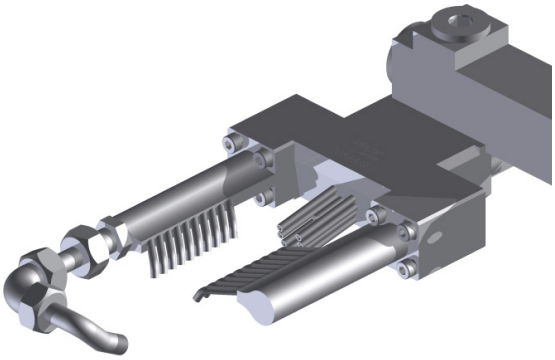

Internal cylindrical grinding

- Large contact lengths lead to high thermal loads during internal cylindrical grinding.
- Due to the contact zones being difficult to access, lubricoolant supply is highly challenging.
- Conventional nozzles lead to an irregular supply to the grinding zone.
- Special needle nozzles are fed into the bore with the grinding tool and allow optimum lubricoolant supply.
- Example applications include: bushings, bores, antifriction bearings, etc.

Tool grinding

- In tool grinding, the grinding wheel has changing contact areas due to complex component geometries (e.g. drill slots).
- Round or profile-adapted needle nozzles ensure that the entire relevant grinding wheel zone receives adequate lubricoolant supply.
- The needle nozzles not only reduce the required lubricoolant volume but also lead to higher component quality and productivity.
- For example, in the JUNKER-JUSTAR, needle nozzles allow optimum lubricoolant supply even for batch size 1.

Grindaix Nozzles for ...

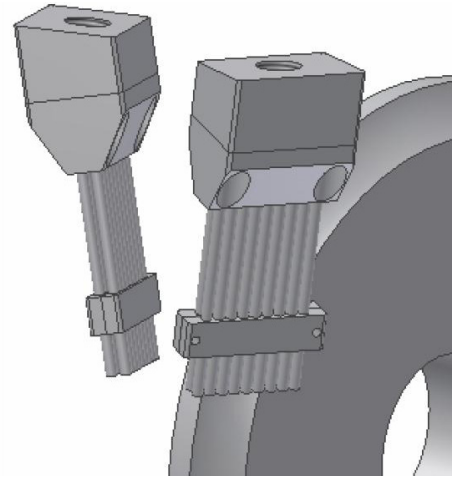

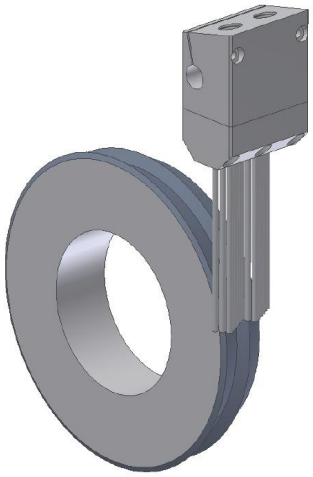

Gear grinding

- During tooth flank or generating gear grinding, the entire profile of the grinding tool must receive an adequate supply of lubricoolant.
- Adapted needle nozzles ensure optimum lubricoolant supply to the tooth flanks.
- This leads to longer tool life and damage-free component production.

Cooling of dressing tools

- Lubricoolant supply is often disregarded during dressing operations.
- This leads to both an increase in dressing tool wear due to the high temperature load of the dressing diamonds and to unstable dressing results.
- The use of needle nozzles during dressing ensures optimum lubricoolant supply both for stationary dressing tools as well as for form and profile rollers.

Grindaix Nozzles for ...

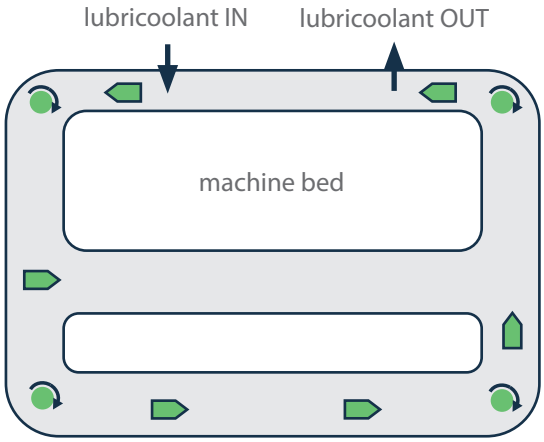

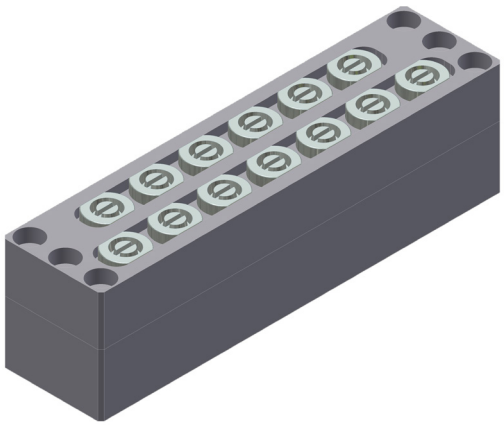

Flushing the machine bed

- Corner flushers avoid chip accumulation and reduce manual cleaning efforts.
- Direction changers are efficient and shape your lubricoolant flow on the machine bed.
- Consumption and pressure supply data for all nozzle types.
- Lubricoolant requirement plan for bed flushing.

High-Pressure Cleaning

- Chips can clog the pores of the grinding wheel, particularly when machining ductile materials.
- Increased friction then leads to a rise in temperature and to grinding burn.
- Cleaning nozzles from grindaix flush the grinding wheel clean in an optimum way, thereby preventing clogging.
- All pressure supply and lubricoolant consumption data is represented per nozzle in a characteristic line.

Frequently Asked Questions:

Can new nozzles really make that much of a difference?

Yes. By optimizing lubricoolant volume and lubricoolant exit speed, you can push your process to the maximum. Optimum lubricoolant supply reduces the cycle time and decreases tool wear.

Can they be used on old machines?

In principle, our nozzles are suitable for all machines, irrespective of age. The only prerequisite is sufficient pressure supply. Simply take a look on the next page at our list of machine retrofitting possibilities.

Which design data do you require?

Get in touch with us via the inquiry form, email or telephone and we will clarify everything else with you. Or you can contact our technical sales department in your area. You can find the contact details online under: Contact/Representations. If you require a confidentiality agreement, we will be happy to conclude one with you.

Do grindaix nozzles assist in reducing CO_2 emissions?

Yes, reductions in CO_2 emissions are achieved as a direct result of using our nozzles. Decreasing lubricoolant requirements as well as avoiding unnecessarily high power consumption in your pumps leads to direct savings when it comes to CO_2.

What are the concrete savings?

In Germany, lubricoolant-related operating costs averaging 150 euros per year are incurred per litre/min of the lubricoolant flow rate! If we reduce your lubricoolant requirements by 100 l/min, you thus save 15,000 euros per year for each machine. Take a look at our download area under Savings to see a selection of our results.

Machine Retrofit Kits

Savings of up to 25,000 euros per annum // CO_2 reduction of up to 60 %

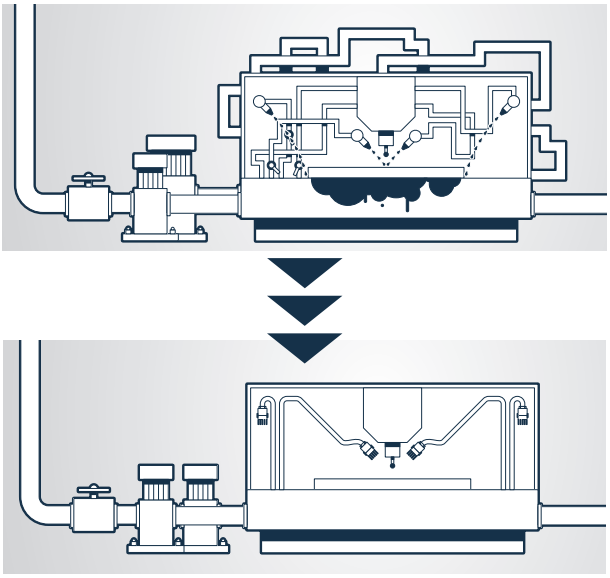

Based on more than 7500 applications to date, we can provide you with complete retrofit kits for grinding machines. Intensive preparation means that the installation process may be completed in a brief period of time. We verify the lubricoolant-related cost reduction by measuring your lubricoolant consumption prior to and following retrofitting and testing.

for the following Machine Types... (selection)

Schaudt PS 51 / CF41/ ZX11

Mikrosa Kronos S/M/L

DOIMAK RER/RIR/ RFM

Reishauer RZ 400

Präwema Synchrofine 205 HS

ABA SLM V2 4002

KEHREN Ri series

Heller BAZ MCi 16.1

Landis LT 1/2/3 / LVA / 5RIWE

Blohm Profimat MT/MC/RT

Gleason Pfauter P 600

JUNKER all machines with year of manufacture < 2008

Lid Köping CL 660

DISKUS DDW series

ELB MICRO-CUT 4 250 S

...



Close to you!

http://www.grindaix.de/en/contact/representatives.html

Enter your postcode on our website and you will directly receive the data of our contact partner in your vicinity.

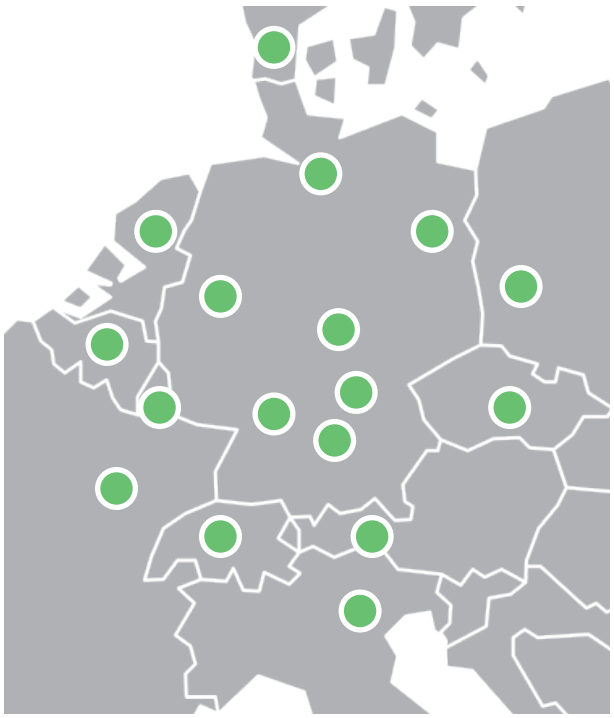

Contact
Grindaix GmbH
Marie-Curie-Straße 8
50170 Kerpen
Germany

info@grindaix.de
www.grindaix.de

MANAGEMENT BOARD
Roman Stabauer, M. Eng.
Glen May, B.Eng.

Phone.: +49 2273 95373 0

Grindaix

Efficient coolant systems.



IMPRINT
Grindaix GmbH
Marie-Curie-Straße 8
50170 Kerpen
Germany

MANAGEMENT BOARD
Roman Stabauer, Glen May

DESIGN & LAYOUT
formvermittlung, Hamburg

copyright © 2024 grindaix GmbH