WEAR-RESISTANT PLATE AND STABILIZERS

We can provide almost all nozzle geometries with wear protection. Here we distinguish between



Protection against abrasion wear

Wear protection plates for optimum protection of our coolant nozzles against the abrasive effect of the coolant-grain chip jet rotating with the grinding wheel. For highly abrasive applications, the wear plates can also be supplied with a very hard wear protection layer, depending on the geometric design.

Protection against damage during assembly or disassembly work

Our metal stabilisers protect the needles and keep them in position. They can be sensibly used at nozzle ends and also in the middle of the needle length for very long needles.

We protect your nozzles!

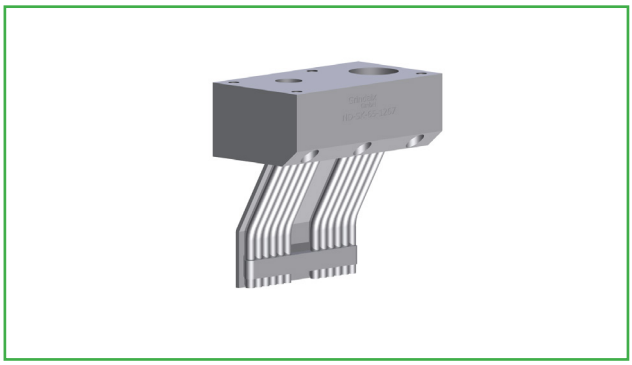



Grindaix GmbH
Marie-Curie-Str. 8
50170 Kerpen

☎ +49 2273 • 953 730

info@grindaix.de
www.grindaix.de