

gFlex by grindaix

Flexible articulated metal tube system

grindaix

A QUAKER HOUGHTON COMPANY



Advantages gFlex

pressure stability and leak tightness
up to 50 bar lubricoolant pressure

maximum flexibility
may be combined with ALL Grindaix nozzles
(cooling, cleaning, extinguishing, flushing, saturating)

flow-optimized
minimum pressure losses due to specially designed lubricoolant line
incl. lubricoolant pressure/volume flow characteristic curve

easy assembly
simple handling due to mechanical pre-tensioning of the basic elements
profile sealing rings at the machine and nozzle connection



mechanically pre-tensioned

industry 4.0
incl. pressure sensor connection
incl. characteristic curves for all tube system lengths
incl. connection for lubricoolant display unit (p, Q, vKSS) - Coolant Display, Coolant Monitoring System



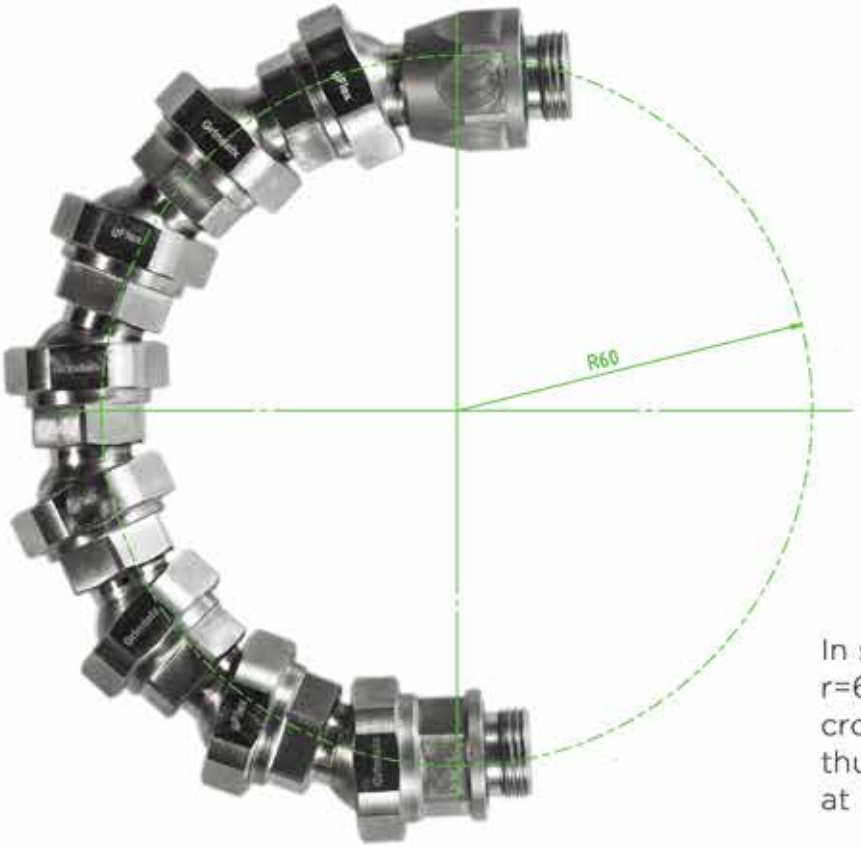

In spite of the low bending radius of r=60 mm, the gFlex has an internal cross-section of up to 12.4 mm and thus ensures maximum volume flow at minimum pressure loss.

Technical specification

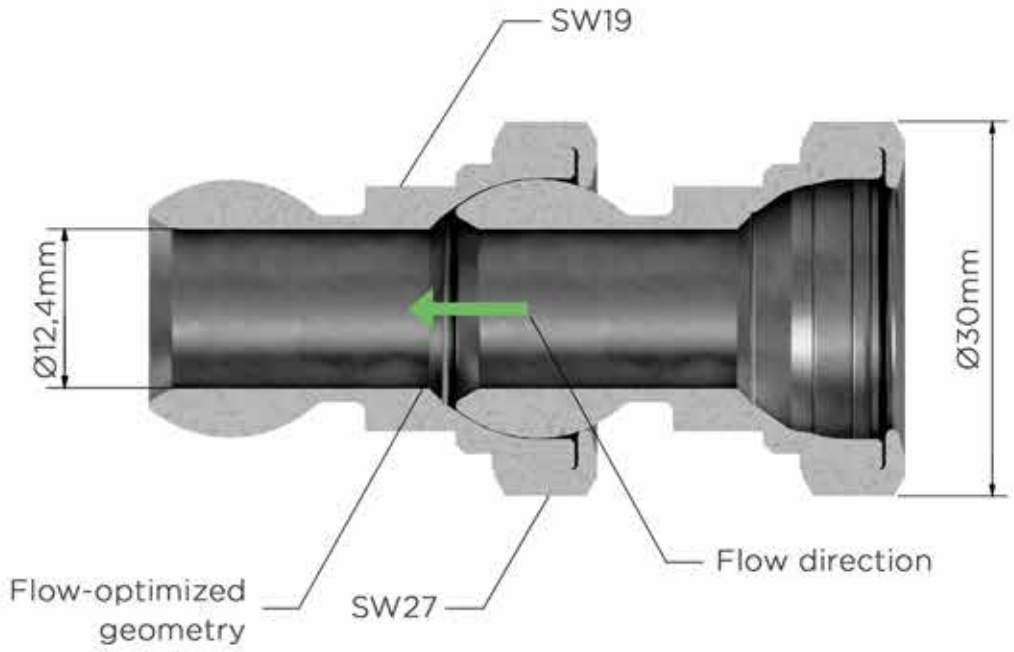

gFlex

Pressure losses in the supply line between the pump and the nozzle are an important topic in lubricoolant supply technology. That is why we have developed the gFlex in such a way that it combines optimum flow properties with flexibility and stability.
We have precisely determined the pressure loss due to pipe friction resistance, thereby allowing you to specify the design of your lubricoolant supply in detail. Another advantage is that the special construction of the gFlex means that hardly any dirt can settle in the tube.

gFlex-characteristic curve

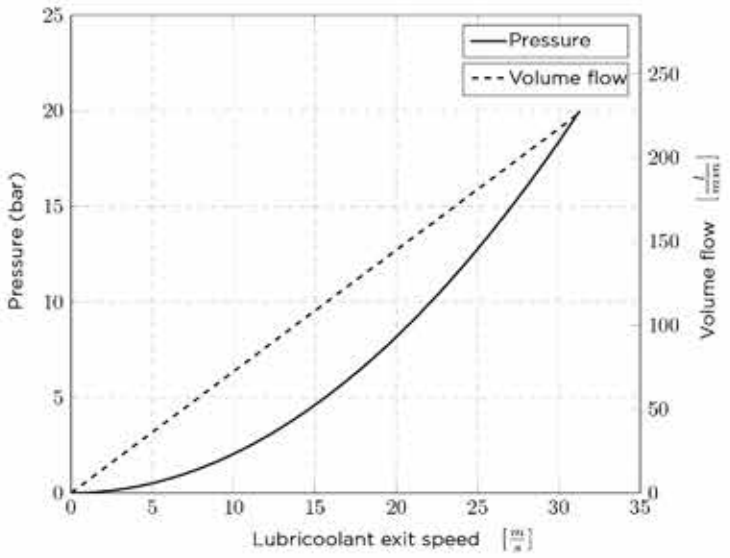

With the aid of gFlex characteristic curves, you can correctly determine the supply of the Grindaix nozzle based on the volume flow required for your process.

ND-45-gFlex



Advantages

- needle nozzle with 45 mm supply width
- varibale connection possibility via two supply apertures
- easy assembly
- compatible with the Grindaix Coolant Pointer, Coolant Display and Coolant Monitoring System
- long service life due to the special Grindaix assembly process

Grindaix-characteristic curve

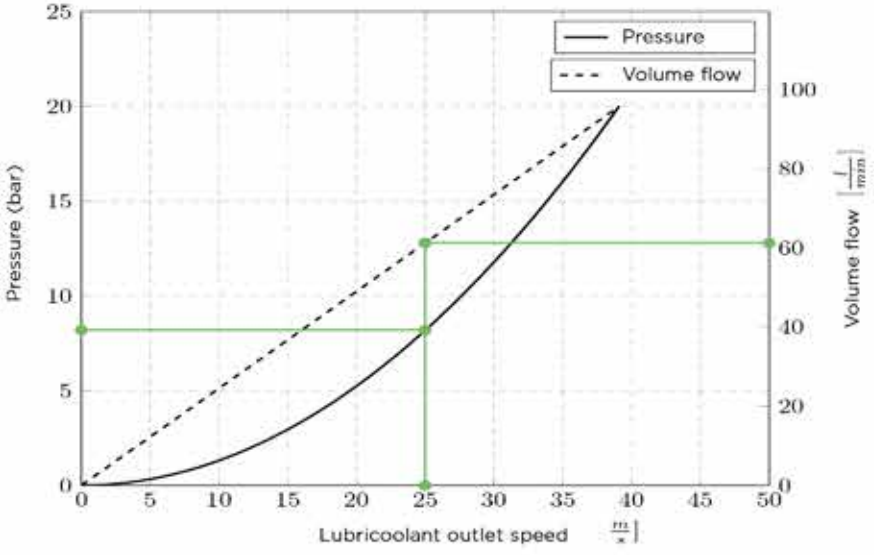

The Grindaix nozzle characteristic curve allows you to determine the supply to your nozzle in a customized way based on the volume flow required for your process.

gFlex components



gFlex machine adapter (gFlex-M-02-[XXX])
available in G1/4", G3/8", G1/2", G3/4"

gFlex basic element 32mm (gFlex-M-01-032)
operating pressure of 50 bar

gFlex basic element 50mm (gFlex-M-01-050)
operating pressure of 50 bar

gFlex basic element 80mm (gFlex-M-01-080)
operating pressure of 50 bar

gFlex basic element 120mm (gFlex-M-01-120)
operating pressure of 50 bar

gFlex basic element 150mm (gFlex-M-01-150)
operating pressure of 50 bar

gFlex nozzle adapter (gFlex-M-02-[XXX])
available in G1/4", G3/8", G1/2", G3/4"

gFlex needle nozzle (ND-45-gFlex)
(ND-85-gFlex)
available in supply width of 45mm and 85mm
pressure sensor optional (Coolant Display)



Description	Item number
	Basic element (01)
Basic element L=50mm	gFlex-M-01-050
Basic element L=80mm	gFlex-M-01-080
Basic element L=120mm	gFlex-M-01-120
Basic element L=150mm	gFlex-M-01-150
	Adapter (02)
Adapter G1/4" (machine side)	gFlex-M-02-M14
Adapter G3/8" (machine side)	gFlex-M-02-M38
Adapter G1/2" (machine side)	gFlex-M-02-M12
Adapter G3/4" (machine side)	gFlex-M-02-M34
Adapter G1/4" (nozzle side)	gFlex-M-02-D14
Adapter G3/8" (nozzle side)	gFlex-M-02-D38
Adapter G1/2" (nozzle side)	gFlex-M-02-D12
Adapter G3/4" (nozzle side)	gFlex-M-02-D34
Quick changer G3/8" (machine side)	gFlex-M-02-S38
Quick changer G1/2" (machine side)	gFlex-M-02-S12
Anglepiece	gFlex-M-02-TS
Anglepiece 45°	gFlex-M-02-W45
Anglepiece 90°	gFlex-M-02-W90
Adapter G1/4" (inner thread)	gFlex-M-02-A14
Pressure intake G3/8" + Minimess	gFlex-M-02-DA
	Nozzle (03)
Round nozzle Ø2,0mm	gFlex-M-03-RD2
Round nozzle Ø4,0mm	gFlex-M-03-RD4
Round nozzle Ø6,0mm	gFlex-M-03-RD6
Round nozzle Ø8,0mm	gFlex-M-03-RD8
Angle nozzle 45° Ø4mm	gFlex-M-03-WD45
Angle nozzle 90° Ø4mm	gFlex-M-03-WD90
Needle nozzle (supply width 45mm)	ND-45-gFlex
Needle nozlzle (supply width 85mm)	ND-85-gFlex



gFlex

www.grindaix.de/coolant-product/gflex

grindaix

A QUAKER HOUGHTON COMPANY

In Kooperation mit:

BESTDO

Kühlung auf den Punkt gebracht.

Grindaix GmbH
Marie-Curie-Str. 8
50170 Kerpen
Tel: +49 (0)2273-95373 66
Email: gflex@grindaix.de

made in Germany